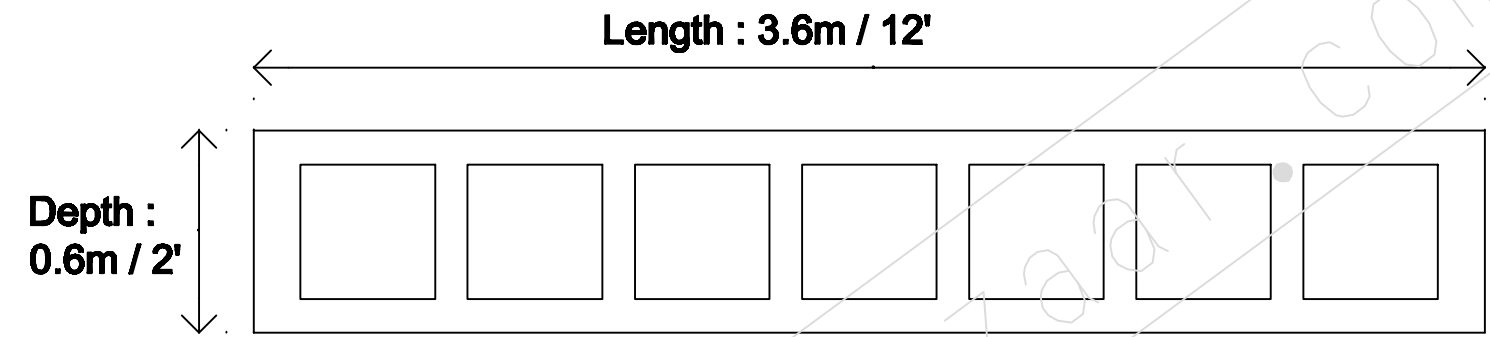

Ortus : plan

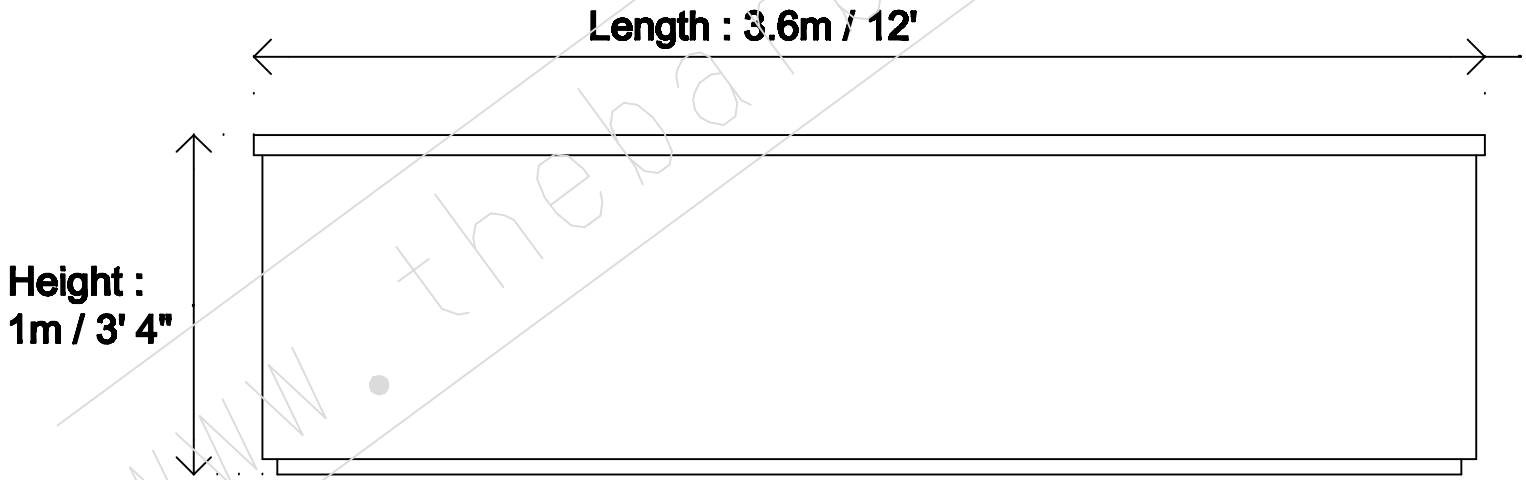

Ortus : elevation

www.thebarbazaar.com

the bar bazaar: notes

Ortus
cocktail bar or servery
counter: white laminate
fascia: painted
features: underlit glass panels
serves : 200
tel: 020 8855 6942
fax: 020 8855 9888
drink@thebarbazaar.com
www.thebarbazaar.com
drawing no.:ORT1
revised on: 18-05-07
scale: N/A
drawn by: T.E.R